SRK Electronics

MFTX100

100W MF AM transmitter

Operation and service manual

Manual version 1.0
Issued 17 July 2013
This manual covers all units from serial number 388

Contents

1. OVERVIEW 5

2. SPECIFICATIONS 6

3. WARRANTY 7

4. UNPACKING 8

5. INSTALLATION 9
5.1. General 9
5.2. Environmental 9
5.3. Electrical supply 9
5.4. Earthing 10
5.5. Antenna 10
5.6. Audio feed 10

6. EXTERNAL VIEWS 11
6.1. Front panel 11
6.1.1. (1) Display 11
6.1.2. (2) Control knob 11
6.1.3. (3) RF sample connector 11
6.1.4. (4) Air vents 12
6.2. Rear panel 12
6.2.1. (1) Audio input connector 12
6.2.2. (2) RF output connector 12
6.2.3. (3) Mains input connector 12
6.2.4. (4) Earth stud 13
6.2.5. (5) Air vent 13
6.2.6. (6) Analogue remote control barrier strip 13
6.2.7. (7) Serial remote control connector 13
6.2.8. (8) Heatsink 13

7. FRONT PANEL OPERATION 14
7.1. Summary screen 14
7.2. RF menu 15
7.2.1. Setting carrier power 16
7.2.2. Setting carrier frequency 16
7.2.3. Turning RF on and off 16
7.2.4. Reading forward and reflected power 17
7.3. Audio Menu 17
7.3.1. Setting audio gain 17
7.3.2. Reading modulation depth 17
7.3.3. Enabling and disabling the audio low pass filter (LPF) 18
7.3.4. Enabling and disabling audio compressor 18
7.4. Temperature/Volts/Current menu 18
7.5. Alarms 18
7.6. Date/Time menu 19

7.6.1. Reading elapsed days 19
7.6.2. Setting date and time 20
7.7. Night power menu 20
7.7.1. Enabling and disabling night-time power switching 20
7.7.2. Setting night-time power start and stop times 20
7.7.3. Setting night-time power 21

8. REMOTE CONTROL 22
8.1. Analogue remote control 22
8.1.1. Interlock 22
8.1.2. TX OK relay 22
8.1.3. Audio OK relay 23
8.1.4. Alarm tally output 23
8.2. Serial remote control 23

9. ALARMS 24
9.1. SWR alarm 24
9.2. Interlock alarm 24
9.3. RF alarm 24
9.4. PLL alarm 25
9.5. Temperature alarm 25
9.6. Audio alarm 25

10. MAINTENANCE 26

11. CIRCUIT DESCRIPTION 27
11.1. Theory of operation 27
11.2. Transmitter overview 27
11.3. Main board 27
11.4. Remote control board 27
11.5. PWM/RF board 27
11.6. Output board 27

12. ABBREVIATIONS 28

13. BILL OF MATERIALS 29
13.1. Top level BOM 29
13.2. Main board 30
13.3. Remote control board 31
13.4. PWM/RF board 32
13.5. Output board 33

14. DRAWINGS 34
14.1. Overall Schematic 34
14.2. Main Board, top level schematic 36
14.3. Main board, audio schematic 38
14.4. Main board, control schematic 40
14.5. Main board, PLL schematic 41
14.6. Main Board, Digital schematic 42
14.7. Remote control board schematic 43

14.8. PWM/RF board schematic 44
14.9. Output board schematic 45
14.10. Main board, PCB overlay 46
14.11. Remote control board, PCB overlay 47
14.12. PWM/RF board PCB overlay 48
14.13. Output board PCB overlay 49

15. CHANGE HISTORY 50

1. Overview

The MFTX100 is a 100W AM transmitter designed for continuous unattended operation.

Amongst others, the MFTX100 has the following features:

- 1-100W carrier rest power
- Power efficient design
- Pseudo frequency agile
- Electronically balanced professional audio input
- In-built audio compressor
- Over SWR and over temperature protection
- Loss of audio alarm
- Automatic recovery from alarm conditions – no user intervention required
- Night-time power reduction
- Alarm tally – records nature and time of up to 4000 alarms
- Safety interlock input
- Transmitter OK and audio OK relay outputs
- Serial remote control port
- Elapsed operational days counter
- Convection cooled
- Unity power factor mains load
- RF sample port

2. Specifications

RF output power (0% mod)	1-100W, settable in 1W steps
RF output power (peak)	500W
RF output connector	N female
Harmonics and spurious	>-65dBc
Factory set frequency range	531-1701KHz
User set frequency range	within 90KHz of factory setting
Carrier stability	+/-5Hz
Audio input level	0.3-1.5V RMS
Audio frequency response	10Hz-9KHz
Audio distortion	<0.7% THD
Audio signal-to-noise ratio	>60dB
Squarewave tilt @40Hz	5%
Squarewave overshoot	2%
Modulation capability	125% positive peak modulation
Audio input impedance	>10,000 ohms
Audio input connector	XLR 3 pin female
SWR alarm threshold	10W
Over temperature trip	85℃
Audio alarm period	30 seconds
Alarm tally capacity	4000 alarm events
Power input (100W, 0% mod)	160W
Supply voltage	105-264VAC
Supply connector	IEC 3 pin male
Earth stud	M6
Cooling	Convection
Size	3U rack case, 300mm deep
Weight	<10Kg
Ambient temperature	-5℃ to +50℃
Humidity	0 to 95% RH, non-condensing
Altitude	0 to 4000m above sea level

3. Warranty

SRK warrants that the equipment is newly manufactured and is free of any defects in materials and workmanship.

SRK shall rectify any defect in the equipment which is notified in writing to SRK by the Customer within the period of 3 years after the date of acceptance where such defect renders the equipment unable to conform with the specifications and configuration prescribed in this manual.

SRK shall be responsible for all costs of rectification of such defects save for freight and travel costs.

SRK warrants that any replacement parts provided to the Customer are newly manufactured and are free from defects in materials and workmanship. If the replacement parts are found to be defective during a period of 90 days after installation of those parts, they shall be rectified or replaced at SRK's expense.

SRK shall not be liable for defects resulting from improper use of the equipment, whether by the Customer or by a third party or from damage caused to the equipment by external influences, including, but not limited to lightning strike, power surges or irregularity, ingress of water or other moisture, impact or temperature fluctuations in excess of the tolerances set out in the specifications.

4. Unpacking

This section details the way in which the MFTX100 should be unpacked upon receipt by the customer.

Upon receipt the transmitter should be visually inspected to ensure that no damage has occurred in transit.

The packing should be stored and used should it be necessary to return the transmitter to the manufacturer.

Along with the transmitter, the following items should also be present:

- This manual
- Mains lead

The customer should ensure that all items are present and then store them in a safe place.

5. Installation

5.1. General

This section describes the installation and infrastructure requirements for the MFTX100. Departure from the instructions contained herein may void any warranty provided by SRK.

The MFTX100 has been designed to be mounted in a standard 19” rack frame, where it will occupy 3 rack units.

However, the transmitter may also be used in a free standing situation, so long as all other requirements are met as below.

5.2. Environmental

The transmitter is intended for indoor use. The transmitter should be protected from rainfall and direct sunlight, extremes of temperature and humidity and from conditions of high dust levels. The transmitter shall not be operated at altitudes in excess of 4000m above sea level. The transmitter must be installed on a flat, stable surface. The transmitter must be installed in the upright position. The transmitter must be installed in a location free from vermin and the ingress of other animals. The transmitter shall not be installed in locations prone to flooding. All ventilation orifices must be clear to allow adequate air flow.

If installed in a rack, the equipment immediately above the transmitter should not overhang the fins of the heatsink on the rear of the transmitter.

5.3. Electrical supply

The electrical supply to the transmitter must be of the voltage, form and frequency described in the specifications. All electrical wiring must be carried out in accordance with local laws, standards and regulations. If power supply voltages regularly fall outside specifications then a voltage regulator must be installed between the supply inlet and the transmitter.

5.4. Earthing

Adequate earthing of the transmitter is vital to ensure long term reliability and user safety. The electrical supply must be earthed, via the earthing pin of the IEC connector. In countries where power outlet earthing is merely optional, an earthed outlet **must** be used. A separate, independent, earth is required for the transmitter/antenna system and must be connected to the earthing point indicated on the rear of the transmitter. The cable used to connect the earth should be as thick as possible, with 8 AWG being the smallest size acceptable. Where possible, broad earthing band should be used.

In addition to the earth connection to the transmitter, the outer conductor of the coax feed to the antenna should be connected to the earth, as indicated below.

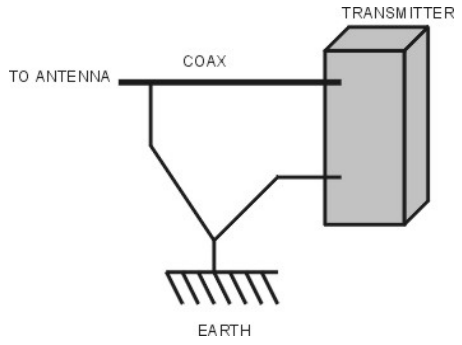

The earth itself must be of high quality buried copper, at least 1.5m deep and preferably in ground that is habitually humid (eg, the base of a gutter down pipe).

5.5. Antenna

The antenna load connected to the transmitter must be tuned to minimise reflections. Whilst the transmitter is designed to withstand high levels of reflection for short periods, continually high levels of reflected power will degrade the long term reliability of the transmitter. Operating SWR should be kept to below 1.9:1.

5.6. Audio feed

In situations where the audio feed to the transmitter is over any form of land line, suitable protection must be included external to the transmitter to ensure voltage transients do not enter the transmitter. These may be in the form of high power zener diodes and/or gas discharge tubes.

6. External views

6.1. Front panel

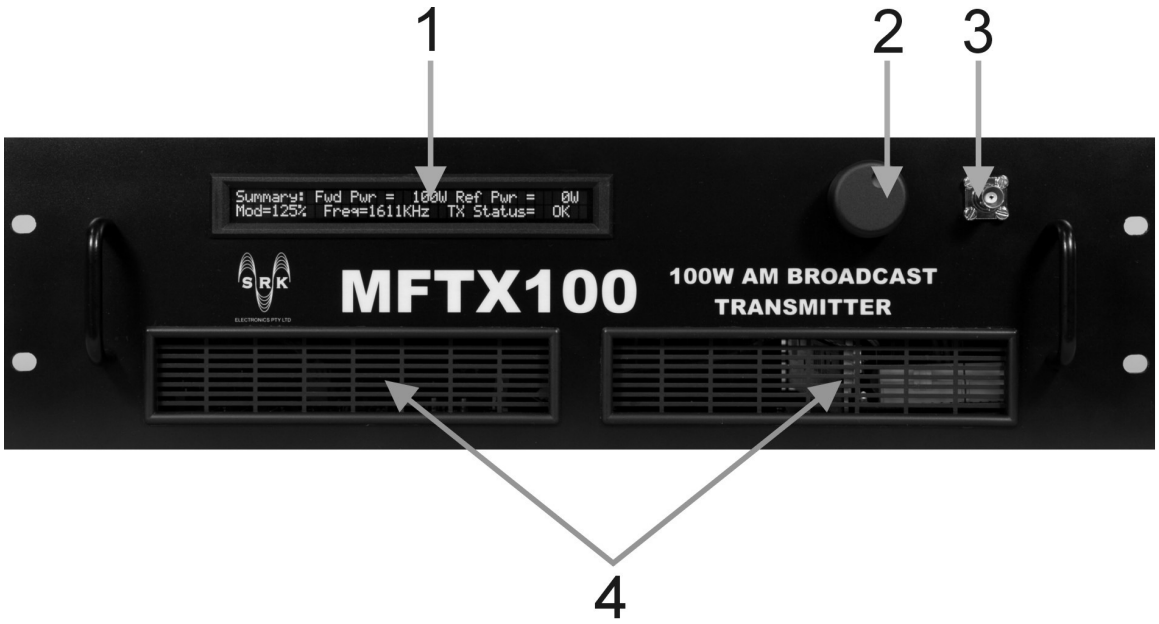

6.1.1. (1) Display

This is a backlit 2 line x 40 character display where all parameters are shown. Used in conjunction with the control knob, parameters can be read and changed by the user.

6.1.2. (2) Control knob

This knob allows the user to scroll through, select, modify and store parameters. This is a compound control. By rotating clockwise or anticlockwise screens and parameters can be scrolled through. Pressing the knob allows the selected parameter to be modified.

6.1.3. (3) RF sample connector

This is a BNC 50Ω female connector that allows the output RF voltage to be sampled. The output level of this connector is about -65dBc when driving a 50Ω load.

6.1.4. (4) Air vents

These vents allow convection cooling of the transmitter and must not be obstructed.

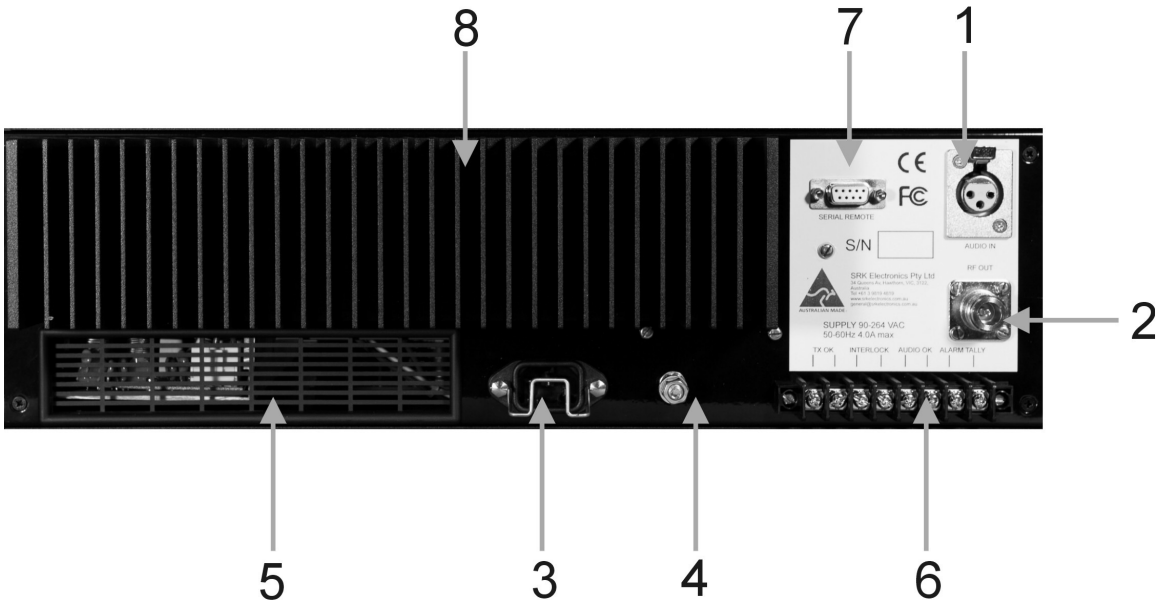

6.2. Rear panel

6.2.1. (1) Audio input connector

Balanced audio input. XLR (Cannon) 3 pin socket. Pin 1 is ground, pin 2 is +ve and pin 3 is –ve. For unbalanced audio short pins 1 and 3. Input impedance is >10,000Ω

6.2.2. (2) RF output connector

RF is output on this connector, normally connected to the antenna via an ATU or combiner network. This is an N type 50Ω socket.

6.2.3. (3) Mains input connector

Mains input. 105 to 267VAC. Use the integral retaining clip to ensure reliable connection.

6.2.4. (4) Earth stud

M6 earth stud for connection to the antenna system earth. This must be connected to a reliable earth for the best possible lightning protection.

6.2.5. (5) Air vent

Allows free air convection cooling of the transmitter, along with the vents on the front panel. This should not be obstructed.

6.2.6. (6) Analogue remote control barrier strip

The analogue remote control functions allow very basic control and monitoring of the transmitter using relay closures. Full details can be found in section

6.2.7. (7) Serial remote control connector

This is an RS232 port which enables full control and monitoring of the transmitter. See section for full details.

6.2.8. (8) Heatsink

The heatsink is the main form of cooling for the transmitter and should have free space both above and below the fins to allow proper operation.

7. Front panel operation

All parameters and functions of the transmitter may be accessed via the front panel using the display and control knob. The knob is a multipurpose control that can be rotated clockwise or anticlockwise or pushed like a button, depending on the desired action. Generally, the control knob is rotated to show the appropriate screen or menu, then further rotated to select the desired function or parameter. Pressing the knob then allows that parameter to be modified (if possible). Pressing again causes the modified parameter to be stored in memory, and a further parameter to be selected if desired.

Note that the serial remote control function “FD” allows the control knob to be disabled for non-secure applications. See section xxx for further details.

The following sections detail the meaning and use of each screen or menu and are listed in the order they are displayed when rotating the control knob in the clockwise direction. Rotating the knob in the anticlockwise direction causes the screens to appear in the reverse order.

7.1. Summary screen

The summary screen appears as follows:

As the name suggests, it shows all the main transmitter parameters to allow a quick overview of the current operating state of the transmitter.

Fwd Pwr shows the current forward RF power in watts.

Ref Pwr shows the current reflected RF power in watts.

Mod= shows the current modulation depth in percent.

Freq shows the transmitter’s operating frequency in kilohertz.

TX status shows the overall alarm status. If none of the alarms is active then OK is shown. If any single alarm is active, then SWR, RF, PLL, TEMP, INT’LK or AUDIO is shown (depending on which alarm is active). If more than one alarm is

active then FAIL is shown. See section xxx for more details about individual alarms.

The summary screen is shown when the transmitter is first switched on.

No parameters can be changed whilst displaying the summary screen.

7.2. RF menu

The RF menu shows all RF related parameters and appears as follows:

Parameters on this menu can be modified by rotating the knob to put the flashing arrow next to the parameter of interest, then momentarily pressing the knob. This will cause the value of the selected parameter to flash. Rotating the knob will increase or decrease the parameter. Whilst changing any parameter has an immediate effect, the knob must be pressed again to ensure the new value is stored in memory. The value of the parameter will then stop flashing, and the arrow will start flashing as before.

In the example of the RF menu shown above the position of the arrow indicates that if the knob is pressed then the set power can be modified.

Set power is the parameter that can be modified to set the output power of the transmitter. Set power and forward power are related in the following way; forward power is the actual average forward power at any given moment. The nature of AM means that the average output power increases with greater modulation depth and is also highly dependent on the crest factor of the audio modulating the transmitter. The set power parameter allows the user to set the output RF power generated by the transmitter at 0% modulation (sometimes referred to as “carrier rest”). Thus under program audio conditions the forward power will be fluctuating but always equal to, or greater than, the set power.

Similarly, reflected power is dependent upon forward power and the characteristics of the antenna system. Ideally, reflected power should read zero watts.

7.2.1. Setting carrier power

As alluded to above, to set the carrier power, rotate the control knob until the flashing arrow is adjacent to and pointing towards “Set Pwr=”. Momentarily pressing the knob will cause the set power to flash. Whilst flashing, rotating the knob in the clockwise direction will increase the power, up to 100 watts. Rotating the knob in the anti-clockwise direction decreases the power. The power can be set to any value in the range zero to 100 watts in one watt increments.

Once the desired power has been set, the control knob should be momentarily pressed once more to ensure the new value is stored in memory. This will ensure that this value is set when the unit is next switched on.

7.2.2. Setting carrier frequency

The carrier frequency can be set by rotating the control knob until the flashing arrow is adjacent to and pointing towards “Freq=”. Momentarily pressing the knob will cause the frequency to flash. Whilst flashing, rotating the knob in the clockwise direction will increase the frequency. Rotating the knob in the anti-clockwise direction decreases the frequency. The range of frequencies that can be selected is dependent upon factory settings and would have been specified when the transmitter was first purchased. However, all frequencies are in multiples of 9KHz.

Once the desired frequency has been set, the control knob should be momentarily pressed once more to ensure the new value is stored in memory. This will ensure that this value is set when the unit is next switched on.

7.2.3. Turning RF on and off

The output RF may be turned off or on by rotating the control knob until the flashing arrow is adjacent to and pointing towards “RF=”. Momentarily pressing the knob will cause the RF status to flash. Whilst flashing, rotating the knob in the clockwise direction will turn the RF on. Rotating the knob in the anti-clockwise direction will turn the RF off.

Once the RF status has been set, the control knob should be momentarily pressed once more to ensure the new value is stored in memory. This will ensure that this value is set when the unit is next switched on.

7.2.4. Reading forward and reflected power

The forward and reflected power are available at “Fwd Pwr=” and “Ref Pwr=” respectively

7.3. Audio Menu

The audio menu shows all audio related parameters and appears as follows:

7.3.1. Setting audio gain

Under normal program audio conditions, audio gain should be set to give the highest value of modulation depth consistent with acceptable levels of distortion. Thus, the correct value for audio gain will depend entirely on the audio input level. Higher gain will be needed for lower levels of audio drive and vice-versa.

The audio gain can be set by rotating the control knob until the flashing arrow is adjacent to and pointing towards “Gain=”. Momentarily pressing the knob will cause the gain to flash. Whilst flashing, rotating the knob in the clockwise direction will increase the gain, up to 100%. Rotating the knob in the anti-clockwise direction decreases the gain. The gain can be set to any value in the range zero to 100% in 1% increments.

Once the desired gain has been set, the control knob should be momentarily pressed once more to ensure the new value is stored in memory. This will ensure that this value is set when the unit is next switched on.

Note that due to the advanced design of the MFTX100, it is not necessary to change audio gain when changing set power. The ratio of carrier power to audio level is entirely determined by the gain setting.

7.3.2. Reading modulation depth

The modulation depth is displayed next to “mod depth =”. Note that this is positive modulation depth.

7.3.3. Enabling and disabling the audio low pass filter (LPF)

The status of the audio low pass filter (9KHz Bessel response) is shown next to “LPF=”. This is permanently on.

7.3.4. Enabling and disabling audio compressor

The status of the audio compressor is shown next to “Compressor =”. This is permanently off.

7.4. Temperature/Volts/Current menu

This menu allows several parameters internal to the transmitter to be monitored and appears as follows:

“Temperature=” shows the internal temperature of the transmitter.

“VDC=” shows the DC output voltage of the main power supply (the input voltage of the modulator stage).

“IDC=” shows the DC current drawn from the main power supply by the modulator stage.

7.5. Alarms

The alarms screen shows the status of all six alarms as either “OK” or “FAIL”.

“TALLY=” shows the total number of alarms that have occurred since the transmitter was first manufactured. This value rolls over to zero when it reaches 65536.

“SWR=” shows the status of the SWR alarm. If the reflected power is greater than 10W then the SWR alarm will be activated and “FAIL” will appear in this field.

“INT’LK=” shows the status of the interlock signal of the analogue remote control port. If the interlock circuit is open then this field will be shown as “FAIL” and RF power will be turned off.

“RF=” shows the status of the RF control loop. If the transmitter is unable to generate sufficient RF power to meet the requirements of the set power level and modulation peaks then this field will show “FAIL”.

“PLL=” shows the status of the phase locked loop, responsible for setting the correct carrier frequency. If the PLL is unable to generate the frequency as programmed then this field will show “FAIL” and RF power will be turned off.

“TEMP=” shows the status of the high temperature alarm. If the internal temperature of the transmitter exceeds 85℃ this field will show “FAIL” and RF power will be turned off.

“AUDIO=” shows the status of the audio alarm. If more than 30 seconds have elapsed with a modulation depth of 2% or less then this field will show “FAIL” and the “AUDIO OK” relay contact of the analogue remote control interface will go open. This can be used to reset the program source or select an alternative.

7.6. Date/Time menu

The date/time menu allows the current date and time to be set.

7.6.1. Reading elapsed days

“ELAPSED DAYS” shows the number of days the transmitter has been running since it was manufactured. If RF is turned on then this value is incremented at midday of every day. This parameter can be used to determine the total operating time that the transmitter has achieved.

7.6.2. Setting date and time

The time and date are shown in the format hour:minute:second day/month/year. The time is always in 24 hour format.

Pressing the control knob momentarily will allow the time and date to be set. The hour value will flash, indicating that rotating the knob will increment or decrement the hour. Once the correct hour has been set, another press of the knob will cause the hour to stop flashing and the minute to start flashing. The minute may now be set. The second, day, month and year are set in the same way and in that order. A final press of the knob once the year has been set causes the clock to be programmed with the set time and date.

7.7. Night power menu

The output power of the MFTX100 may be automatically reduced during the hours of darkness to allow for the disappearance of the D layer. This can be done by enabling the night-time power between a given start and stop time.

The night power menu allows the night-time power to be enabled, as well as the start and stop times and power level to be set.

7.7.1. Enabling and disabling night-time power switching

When the night power menu is displayed, pressing the control knob will cause the DISABLED or ENABLED field to flash. Rotating the knob clockwise will enable night-time power switching. Rotating the knob anticlockwise will disable night-time power switching.

7.7.2. Setting night-time power start and stop times

Pressing the knob will cause the “From” hour to start flashing. The start and stop times can be set just as the current time is set on the date/time menu.

7.7.3. Setting night-time power

Once the knob is pressed to set the “to” seconds the night power will flash. This can be set by rotating the knob to show the desired carrier rest power, analogous to the set power during normal operation. If the knob is pressed one last time all values will be stored in memory and if the current time falls between the from and to times, the output power will immediately be set to the night-time power.

Note that it is not necessary for the night-time power to be lower than the set power, or for the from and to times to be in the evening and morning respectively.

8. Remote control

The MFTX100 has two means of remote control and monitoring. The analogue remote control is a very basic analogue interface which allows the transmitter to be turned on/off and audio and other alarms to be monitored. The serial remote control is a sophisticated RS232 based interface that allows all parameters and controls to be accessed.

8.1. Analogue remote control

The analogue remote control interface consists of an 8 way barrier strip that allows four signals to be accessed.

8.1.1. Interlock

The interlock input turns on the RF output of the transmitter when both terminals are shorted together. One of the terminals is internally connected to 0V, so control can also be implemented by using a low impedance voltage source to feed the interlock input. In this case the transmitter will be turned on when the input voltage is below 0.4V and turned off when the input voltage is above 2.4V. The input resistance is greater than 10KΩ for voltages below 5V. The maximum safe input voltage is 15V.

When the interlock input is open circuit (or at a voltage of >2.4V) the transmitter output is turned off, though all other functions are still active. The interlock alarm is also active and is indicated as such on the display.

8.1.2. TX OK relay

When all alarms are OK (except the audio alarm) the TX OK terminals are shorted together (by a relay contact internal to the transmitter). If any alarm becomes active (except the audio alarm) the relay contact will open for the duration of the alarm. As soon as the alarm condition clears the relay contact will close again.

The differential voltage on this contact should be limited to 120VAC or 24VDC and the current should be less than 0.5A AC or DC. Both terminals are galvanically isolated from all other circuitry within the transmitter, but the common mode voltage should be limited to no more than 100V AC or DC with respect to ground.

8.1.3. Audio OK relay

If the modulation depth falls to 2% or below continuously for more than 30 seconds the AUDIO OK relay contact will open and stay open until the modulation depth rises above 2%, even instantaneously.

The differential voltage on this contact should be limited to 120VAC or 24VDC and the current should be less than 0.5A AC or DC. Both terminals are galvanically isolated from all other circuitry within the transmitter, but the common mode voltage should be limited to no more than 100V AC or DC with respect to ground.

8.1.4. Alarm tally output

The alarm tally output is a voltage source that generates an output of between 0V and 7V, in 1V increments. Each time the alarm tally is incremented, this output voltage is incremented. At 7V, the output returns to 0V upon the next alarm.

The output resistance of this voltage is 100Ω. No external voltage should be injected in to this output.

8.2. Serial remote control

This function is not currently implemented

9. Alarms

The MFTX100 incorporates an exceptional array of alarms that ensure reliable operation with no user intervention. All alarms will recover automatically upon the removal of the cause of the alarm. Whilst some alarms will result in the output of the transmitter being turned off or reduced, the output will return to normal as soon as the alarm in question becomes inactive. The individual alarms are as follows:

9.1. SWR alarm

If the reflected power exceeds 10W then the MFTX100 will automatically reduce the forward power to make the reflected power equal to 10W. This is the result of the operation of a dynamic control loop that follows the peaks of modulation and will act within a few milliseconds of detecting a reflected power of greater than 10W. Furthermore, the speed of the operation of the SWR alarm is inversely proportional to the amount of reflection. Larger reflected powers will cause the loop to limit forward power more quickly than will smaller reflected powers. The overall effect is to allow instantaneous reflections (as would be produced by program audio into a highly tuned load) to pass largely undistorted, whilst ensuring that more serious or sustained reflections do not damage the transmitter.

As soon as the reflected power falls below 10W, the forward power is allowed to return to the proper level and the SWR alarm is cleared.

This cycle may repeat indefinitely with no damage to the transmitter.

9.2. Interlock alarm

As described in the section dealing with the analogue remote control interface, if the interlock circuit is open the transmitter will reduce its output power to zero. As soon as the interlock circuit is closed the transmitter will restore full output.

This alarm may be used for an external emergency shutdown, or for hot standby applications.

9.3. RF alarm

The RF alarm becomes active if the transmitter is unable to generate the required level of RF. The transmitter is not normally shut down whilst this alarm

is active (unless the transmitter has experienced a catastrophic failure) but the modulation may well be heavily distorted.

Operation of this alarm indicates an internal failure of the transmitter that requires repair by a qualified technician.

9.4. PLL alarm

The PLL alarm becomes active if the transmitter is unable to generate the correct frequency.

The output of the transmitter is shut down whilst this alarm is active to avoid interference with other users of the radio spectrum.

Operation of this alarm indicates an internal failure of the transmitter that requires repair by a qualified technician.

9.5. Temperature alarm

The temperature alarm becomes active if the internal temperature of the transmitter exceeds 85℃. Once active, the output of the transmitter is turned off until the internal temperature falls to below 70℃, whereupon the alarm becomes inactive and full output is restored.

As no user intervention is needed to clear this alarm, if the cause of the over temperature is still present then the transmitter will cycle in and out of this alarm condition indefinably.

Operation of this alarm generally indicates inadequate ventilation or inappropriate installation.

9.6. Audio alarm

The audio alarm becomes active if the modulation depth falls below 3% continuously for more than 30 seconds. This alarm is used to detect a loss of external audio and may be used to reset the audio source or select an alternative source.

The audio alarm is deactivated immediately the modulation depth exceeds 2%.

10. Maintenance

The MFTX100 requires little routine maintenance.

The heatsink and ventilation grills should be regularly inspected and cleaned if necessary.

It is also good practice to log all parameters on a monthly basis to allow changes in operating conditions to be identified.

11. Circuit description

11.1. Theory of operation

11.2. Transmitter overview

11.3. Main board

11.4. Remote control board

11.5. PWM/RF board

11.6. Output board

12. Abbreviations

A	Amp(s)
AC	Alternating Current
AM	Amplitude Modulation
ATU	Antenna Tuning Unit
BOM	Bill Of Materials (parts list)
C	Centigrade
dB	Decibels
dBc	Decibels relative to carrier level
dBm	Decibels relative to 1mW (into 50 or 600Ω)
Hz	Hertz
IDC	DC current
K	Kilo, kilo-ohm
Kg	Kilogram
KHz	Kilohertz
LPF	Low Pass Filter
nF	nanofarads
m	metre, milli
M	Mega, mega-ohms
MF	Medium Frequency (300KHz to 3MHz)
MHz	Megahertz
PCB	Printed Circuit Board
pF	picofarads
PLL	Phase Locked Loop
PWM	Pulse Width Modulation or Modulator
R	Ohms
RF	Radio Frequency
RH	Relative Humidity
RMS	Root-Mean-Square
RTC	Real Time Clock
SWR	Standing Wave Ratio
THD	Total Harmonic Distortion
TX	Transmitter
U	Rack unit, 1.75”
uF	Microfarad
uS	Microsecond
V	Volt(s) or voltage
VAC	AC voltage
VDC	DC voltage
VSWR	Voltage Standing Wave Ratio
W	Watt(s)

13. Bill of materials

13.1. Top level BOM

13.2. Main board

13.3. Remote control board

13.4. PWM/RF board

13.5. Output board

14. Drawings

14.1. Overall Schematic

14.2. Main Board, top level schematic

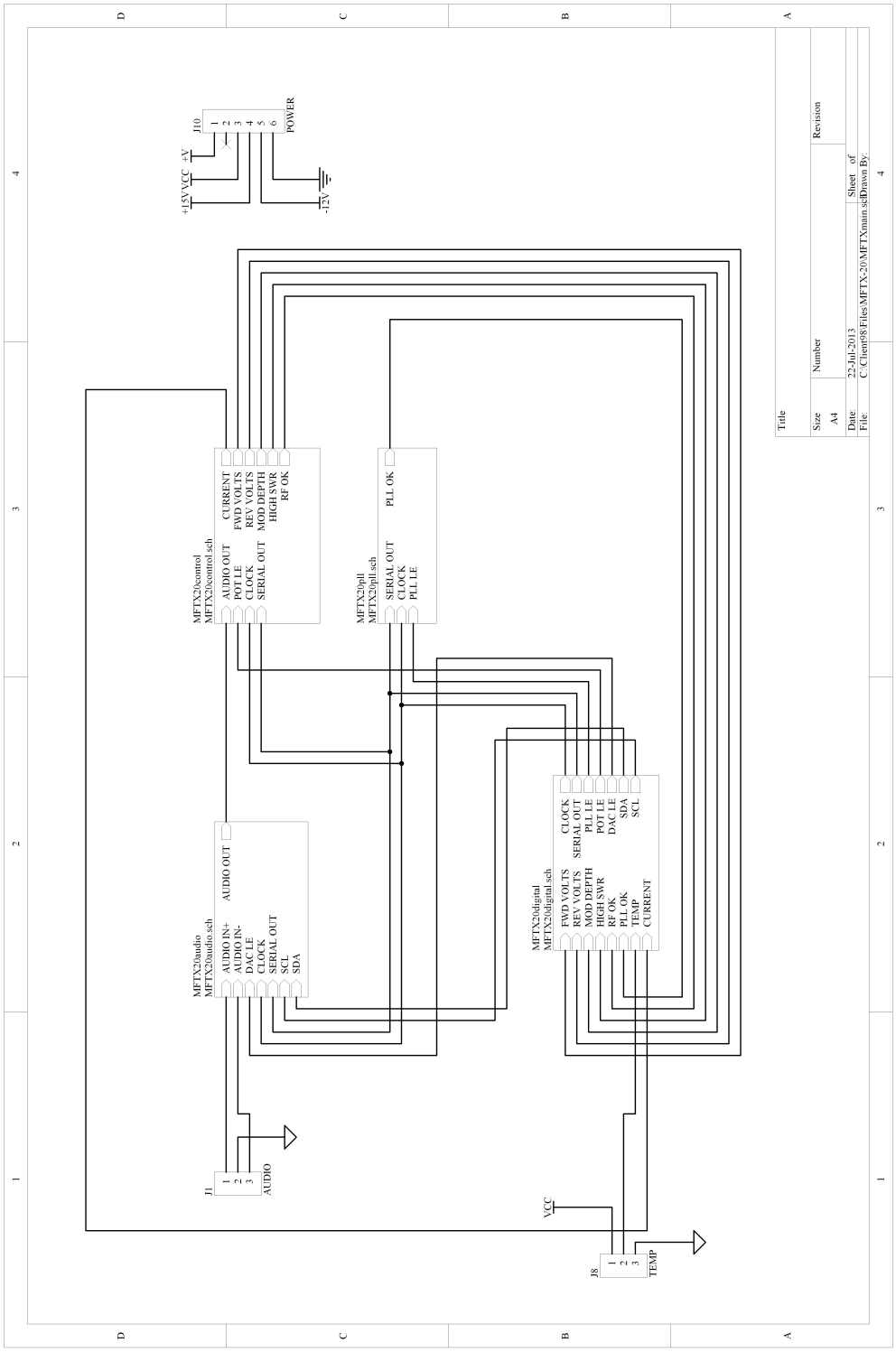

14.3. Main board, audio schematic

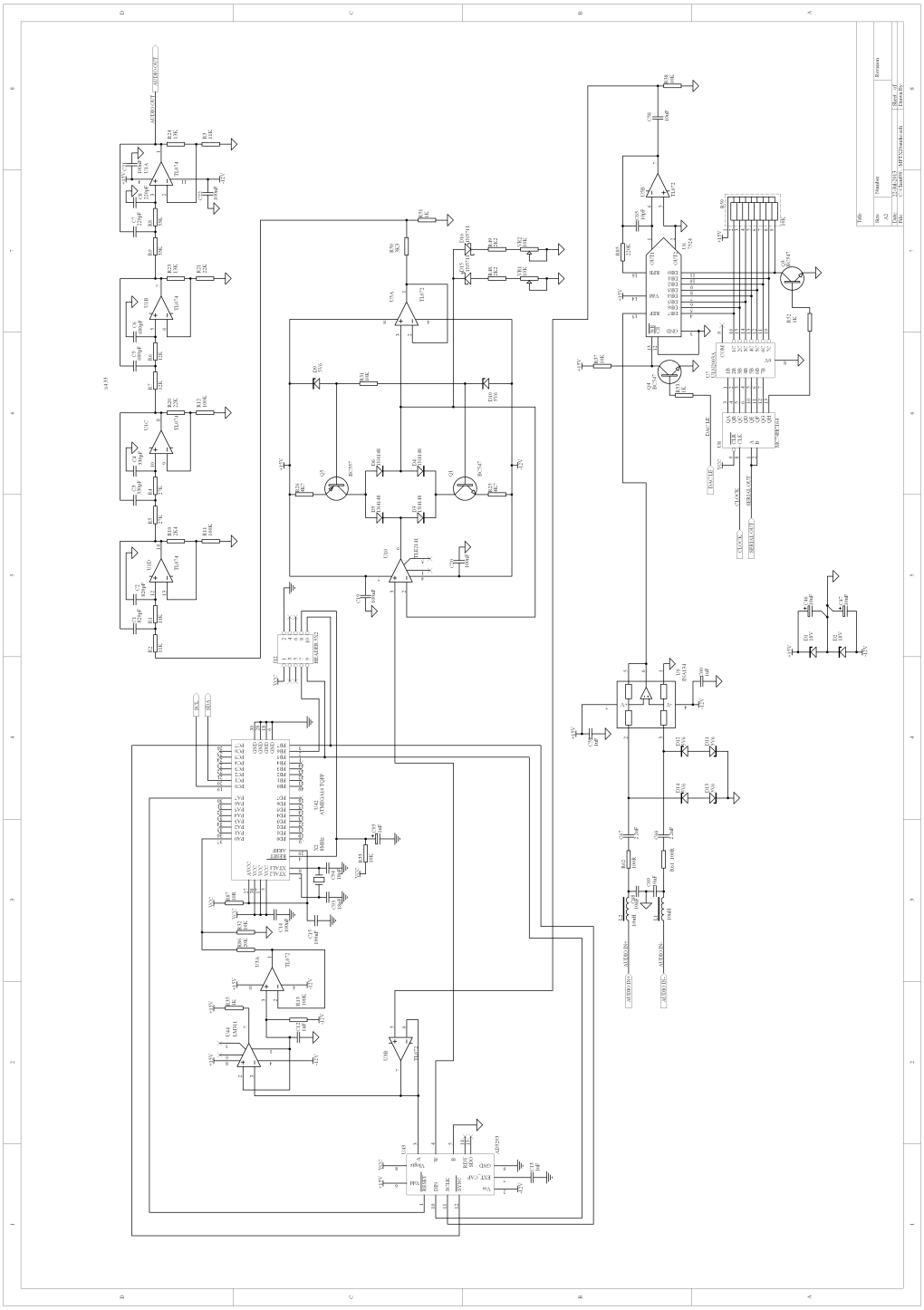

14.4. Main board, control schematic

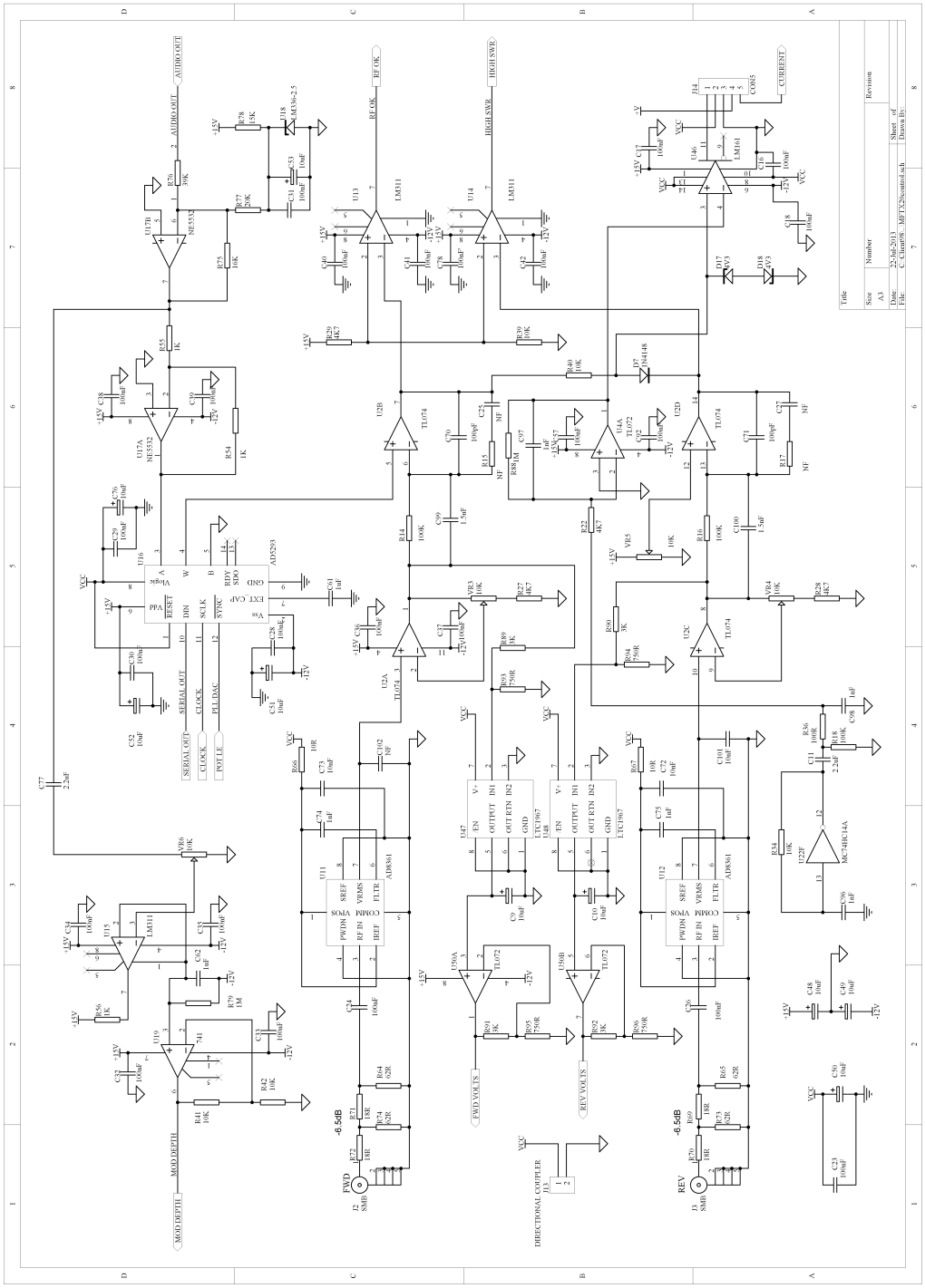

14.5. Main board, PLL schematic

14.6. Main Board, Digital schematic

14.7. Remote control board schematic

14.8. PWM/RF board schematic

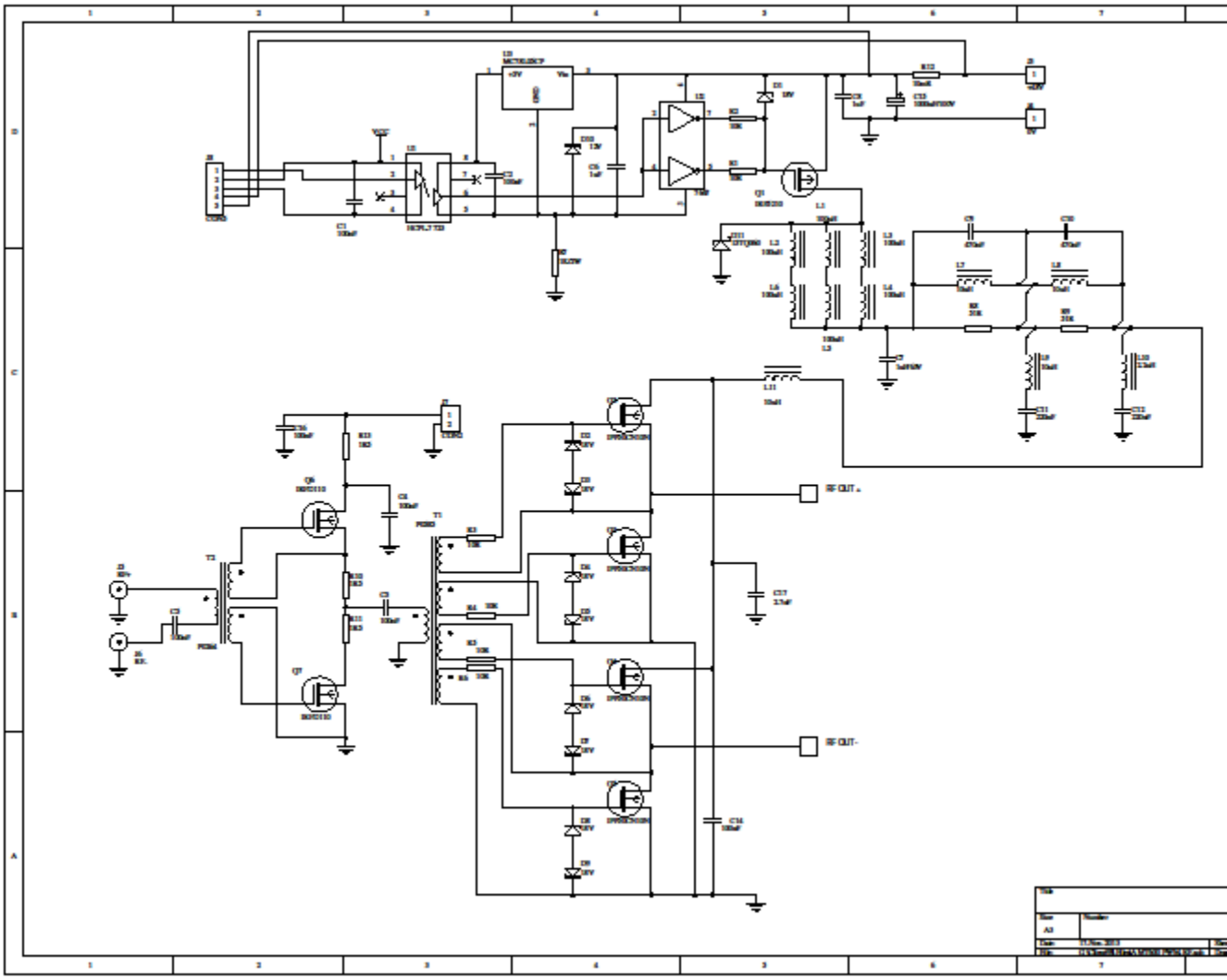

14.9. Output board schematic

14.10. Main board, PCB overlay

14.11. Remote control board, PCB overlay

14.12. PWM/RF board PCB overlay

14.13. Output board PCB overlay

15. Change history

Version No.	Release Date	Description of change(s)
1.0	21/7/13	First issue
1.1	21/10/13	